PIEZO ELEMENT

RPE-3.200-270033-UC-NS71

Electrical Specifications

PARAMETERS		VALUE	UNIT
Resonant Frequency		3.2 ± 0.3	kHz
Resonant Impedance, max		300	Ω
Capacitance	@1kHz (CM/CF)	32000 ±30% / 3000 ± 30%	pF
Input Voltage, max		30	Vp-p
Operating Temperature Range		-20 ~ +70	°C
Storage Temperature Range		-30 ~ +80	°C
Metal Material		Brass	-
Lead Wire		UL1571-AWG28	-
Environmental Protection Regulation	Pb <1000ppm	RoHS2.0	-

Dimension

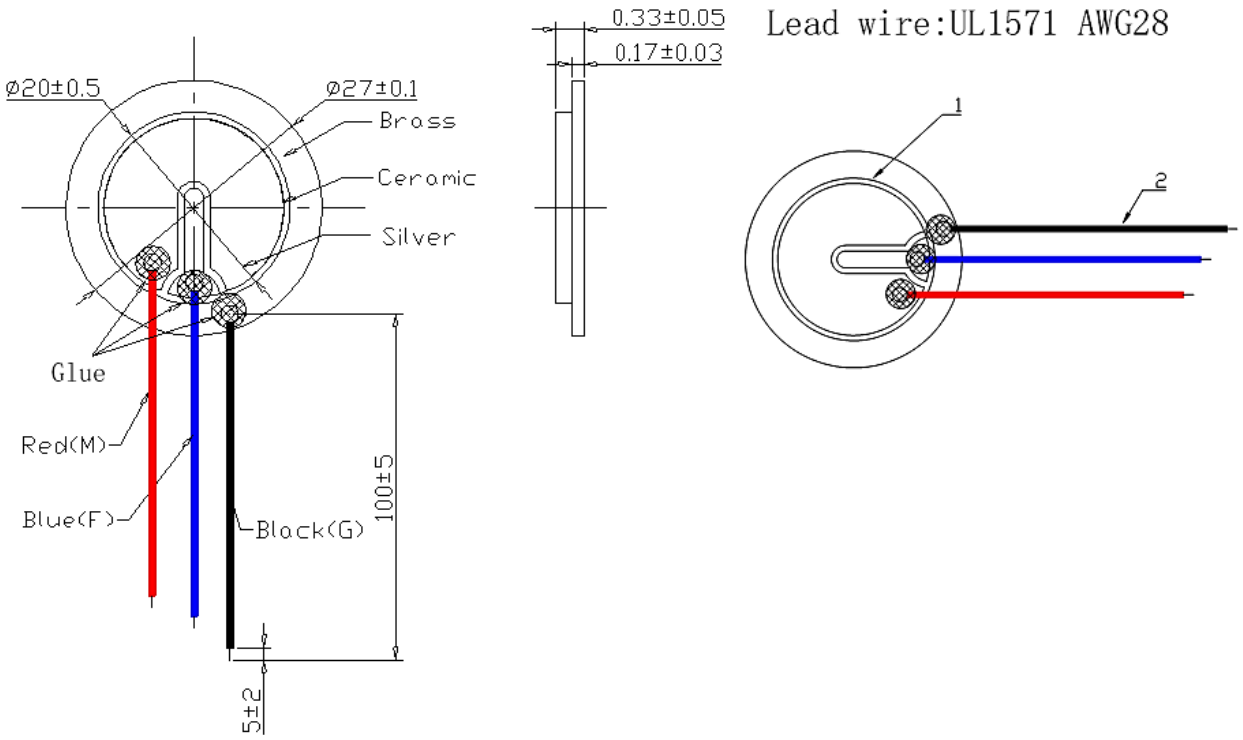

Unit: mm (Tolerance: ±0.5mm unless otherwise specified)

1	Piezo Element
2	Lead Wire

• APPROVAL

DRAWN BY	EV, April 30, 2026
APPROVED BY	AR, April 30, 2026
REVISION	A, Initial Release

Raltron Electronics / RAMI Technology USA, LLC, including its affiliates, employees, agents and other persons acting on its behalf (collectively Raltron/RAMI Tech), disclaim any and all liability for any errors or inaccuracies contained in this data sheet. While Raltron/RAMI Tech has made every reasonable effort ensure the accuracy of all product information, specifications and data contained herein, Raltron/RAMI Tech does not guarantee that the information is accurate, reliable or current. The product information is provided only for reference purposes only and is subject to change, correction or revision, at any time without notice. Raltron/RAMI Tech does not assume any liability arising out of an application or use of any product described herein and disclaims any warranties expressed or implied. The user of products in such applications shall assume all risks of such use and will agree to hold Raltron/RAMI Tech, harmless against all damages.

Copyright © 2026, Raltron Electronics / RAMI Technology USA, LLC. All rights reserved. No part of this document may be reproduced in any form without the prior written permission of Raltron Electronics / RAMI Technology USA, LLC.