❖ ELECTRICAL SPECIFICATION

PARAMETER	VALUE	UNIT
Frequency Range	DC ~ 6	GHz
Impedance	50	Ω
VSWR, max	1.2	-
Durability	500	cycles
Operating Temperature Range	-65 ~ +165	°C
Neutral Salt Spray	48	h

❖ DIMENSIONS

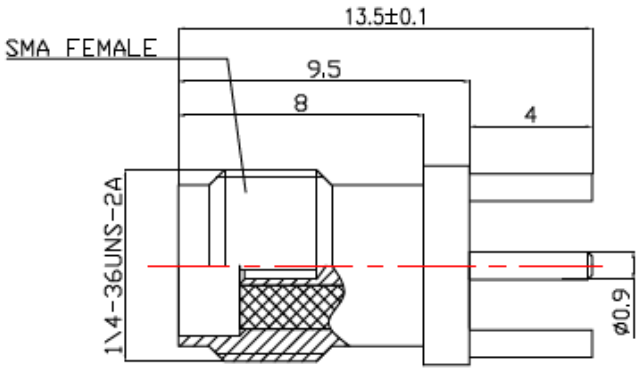

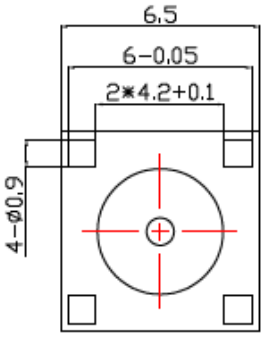

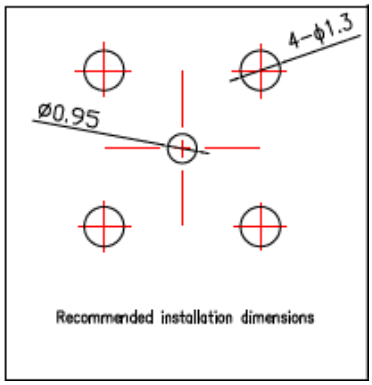

DESCRIPTION	MATERIAL	FINISH
BODY	BRASS	GOLD PLATING
CENTER CONTACT	PHOSPHOR BRONZE	GOLD PLATING
INSULATOR	PTFE	-

Rev	Change	Date	Name

RALTRON
A RAMI TECHNOLOGY Company

Projection	Scale		Date	Name
	--	Drawn	03.29.2024	AR
		Checked	03.29.2024	CP
Dimensions in mm		Approved	03.29.2024	CP

Description
SMA FEMALE CONNECTOR TO PCB

Part Number
RCN-1F-KHE135-LH-001

A